# Building Science

## Lecture 7: Windows

Dr. Matthew Francis
School of Property, Construction & Project Management
RMIT University, Melbourne, Australia

RMIT UNIVERSITY

# Today’s outline

- Windows and Thermal Comfort
- U-values and G-values
- Window performance – why it is important

RMIT UNIVERSITY

# Building Science

## Course content

1. General introduction to Building Science
2. Climate and Building orientation
3. Energy efficiency and Passive control strategies
4. Heat transfer principles
5. Thermal comfort
6. Thermal performance – Thermal bridges

RMIT UNIVERSITY

# Building Science

## Course content (continued)

7. Building envelope systems – Windows
8. Natural lighting
9. Artificial lighting
10. Acoustics
11. Energy
12. Water
13. Summary of course

RMIT UNIVERSITY

# Windows

Important building feature for performance and comfort

RMIT UNIVERSITY

# Thermal Bridges

Problem?

Big problem!

RMIT UNIVERSITY

# Rating Thermal Comfort

There will always be some people (5 %) NOT content in a space

- Predicted mean vote (PMV):
  what people would say about temperature

  +3 hot
  +2 warm
  +1 slightly too warm
  0 neutral
  –1 slightly too cool
  –2 cool
  –3 cold

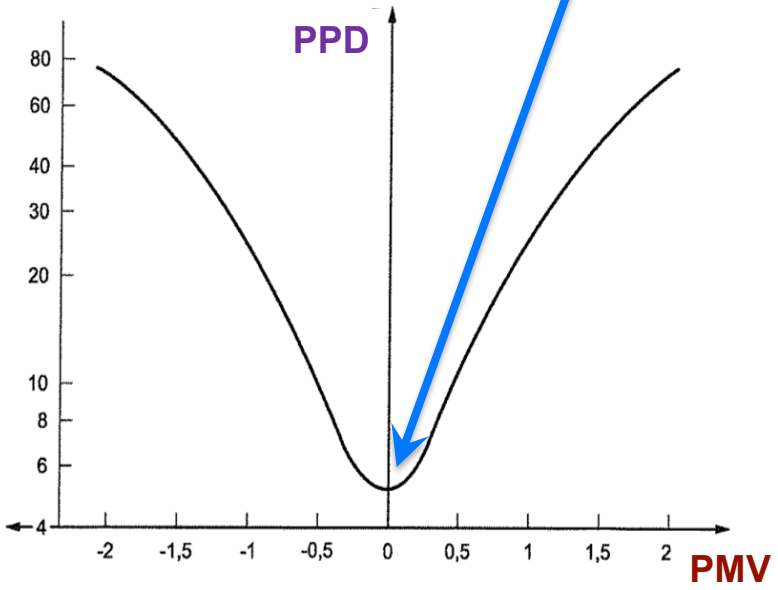


- Percentage of people dissatisfied (PPD):
  how many people would accept a given situation, or not.

Source: DIN EN ISO 7730

# Temperature and Thermal Comfort

The optimum temperature depends on both clothing and activity

Specific heat production index (**MET**)

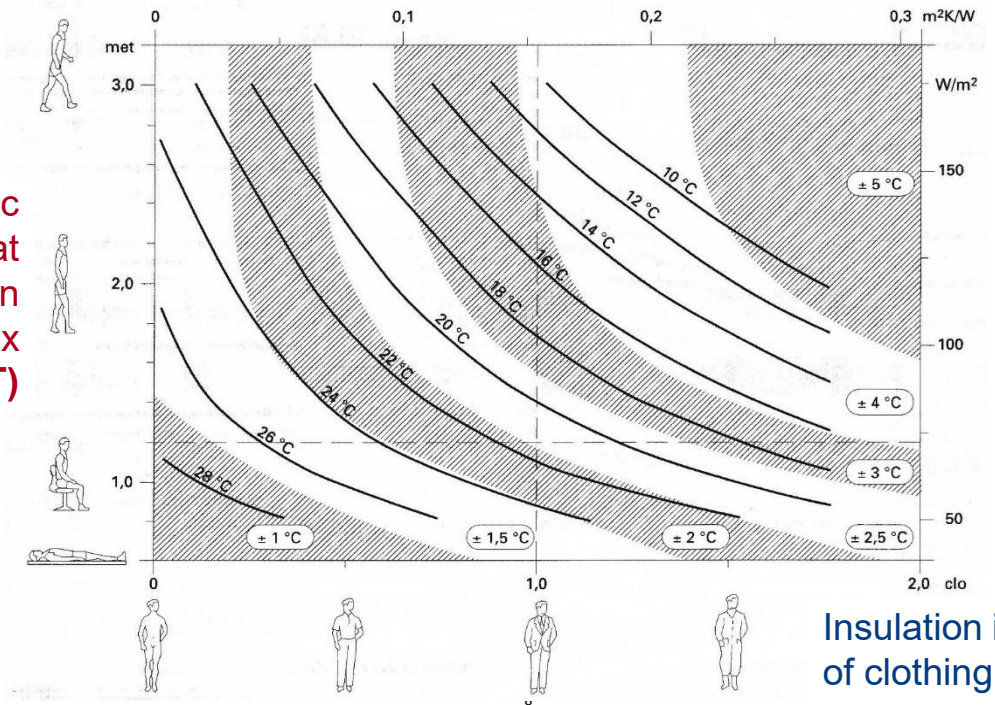


Insulation index of clothing (**CLO**)

Source: DIN EN ISO 7730

# Interior Surface Criterion for Windows

Thermal comfort is significantly influenced by differences between surface temperatures.

In this example, a compensating heating surface near the window is required.

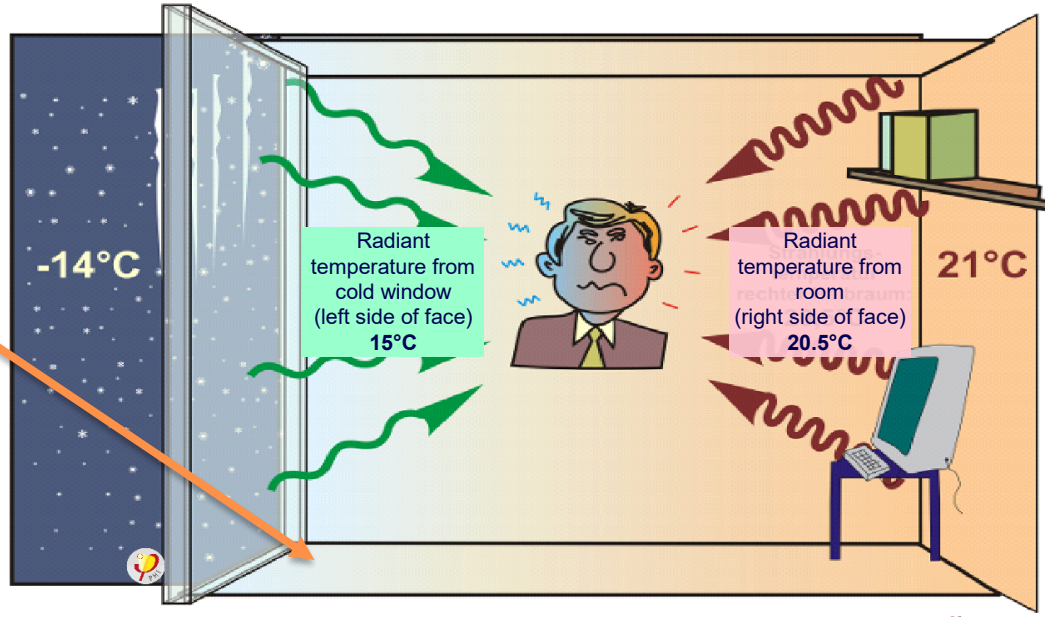


Radiant temperature asymmetry >5.5 K = discomfort

# Interior Surface Criterion for Windows

High performance windows (e.g. $U_w$ = 0.8 W/(m²K)) allows for maximum comfort

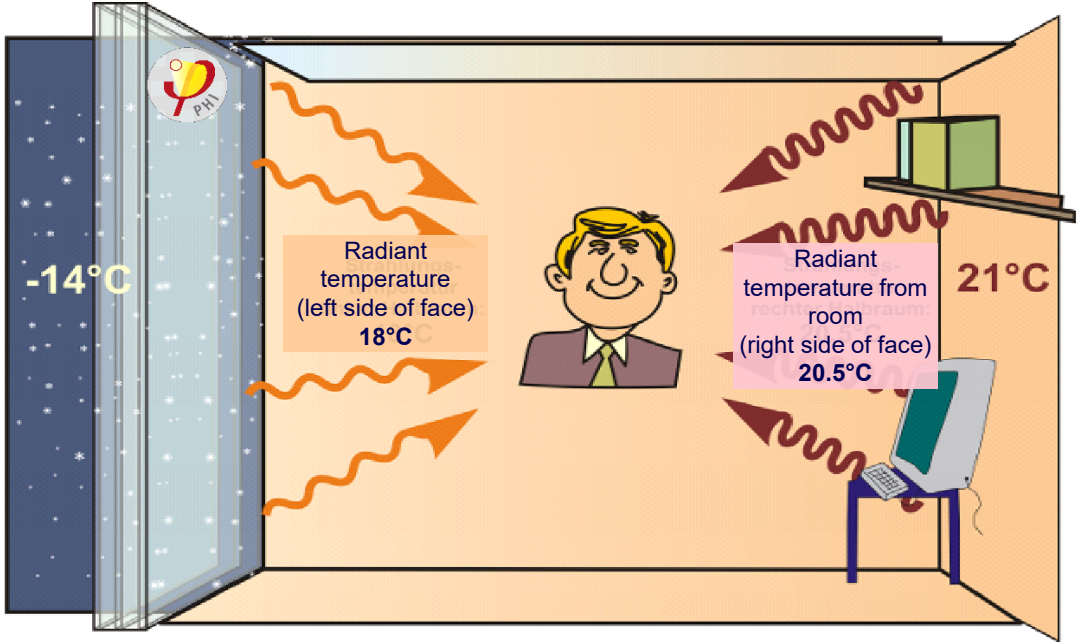


With high-performance windows, the demanding requirements of Fanger‘s equation, on which the international standards for thermal comfort ISO 7730 and ASHRAE are based, are met without a radiator placed beneath the window.

# Temperature Stratification

The temperature difference between floor (0.1 m) and at the height of the head of a seated person (1.1 m), measured at 50 cm distance from the window, **must be < 2 K**
– otherwise, there is a risk of getting “cold feet“.

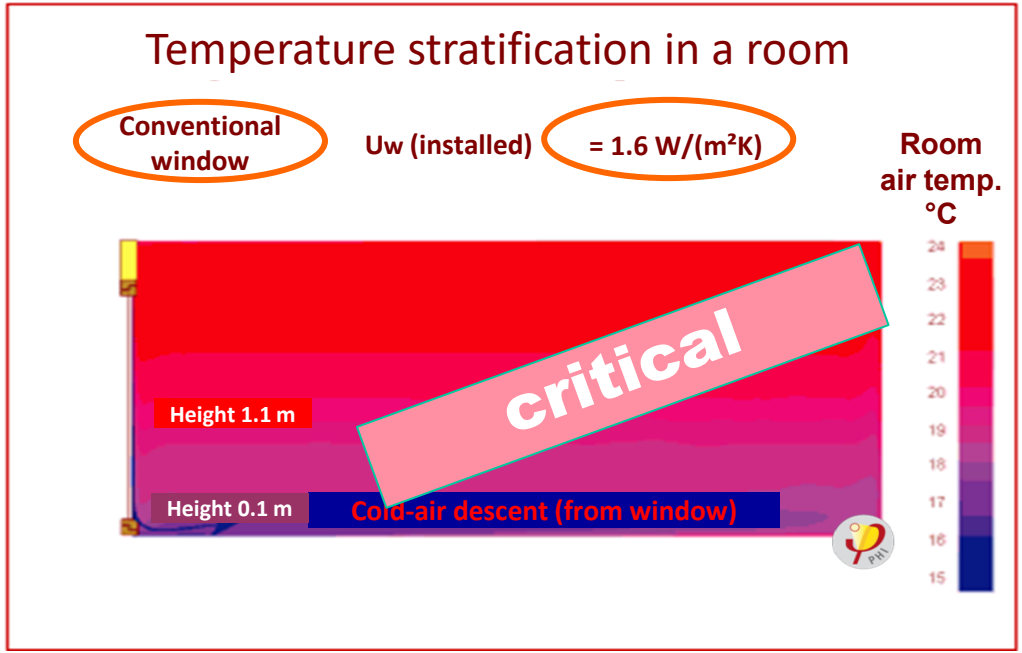


RMIT UNIVERSITY

# Temperature Stratification

The temperature difference between floor (0.1 m) and at the height of the head of a seated person (1.1 m), measured at 50 cm distance from the window, **must be < 2 K**
– otherwise, there is a risk of getting “cold feet“.

## Conventional windows

Uw (installed) > 1.6 W/(m²K)

Difference 1.1 m to 0.1 m: **3 K**

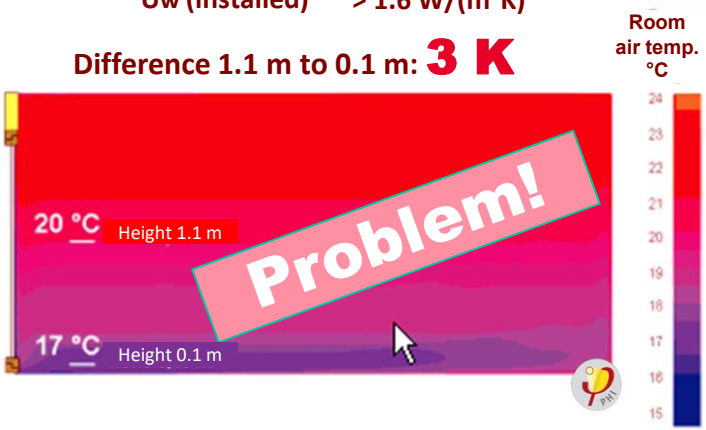


## High-performance windows

Uw (installed) < 0.85 W/(m²K)

Differential 1.1 m to 0.1 m: **1.6 K**

...because there is no cold air descent

# Temperature Stratification

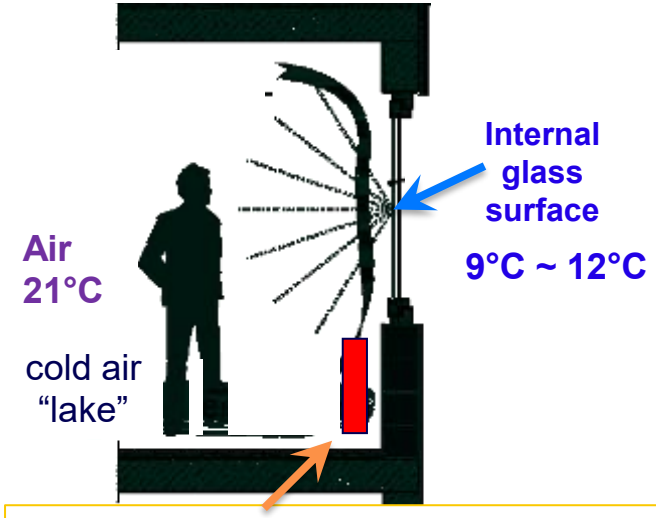


Radiator to balance low surface temperatures and to stop the cold air from circulating

***Common configuration in old buildings***

**NOT COMFORTABLE**

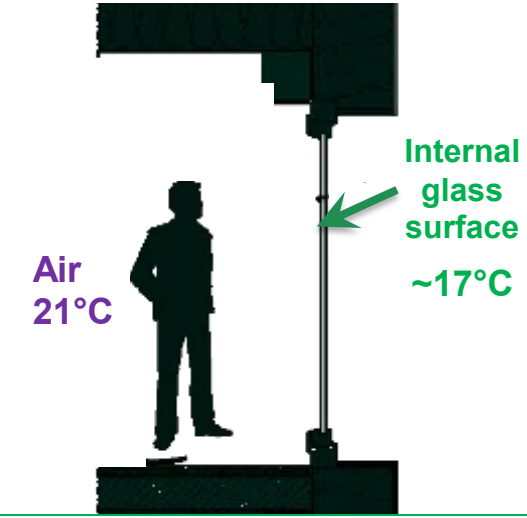


No radiator necessary, if surface temperature is not more than 4.2 K below the operative room temperature

***Answer? improved windows***

**COMFORTABLE**

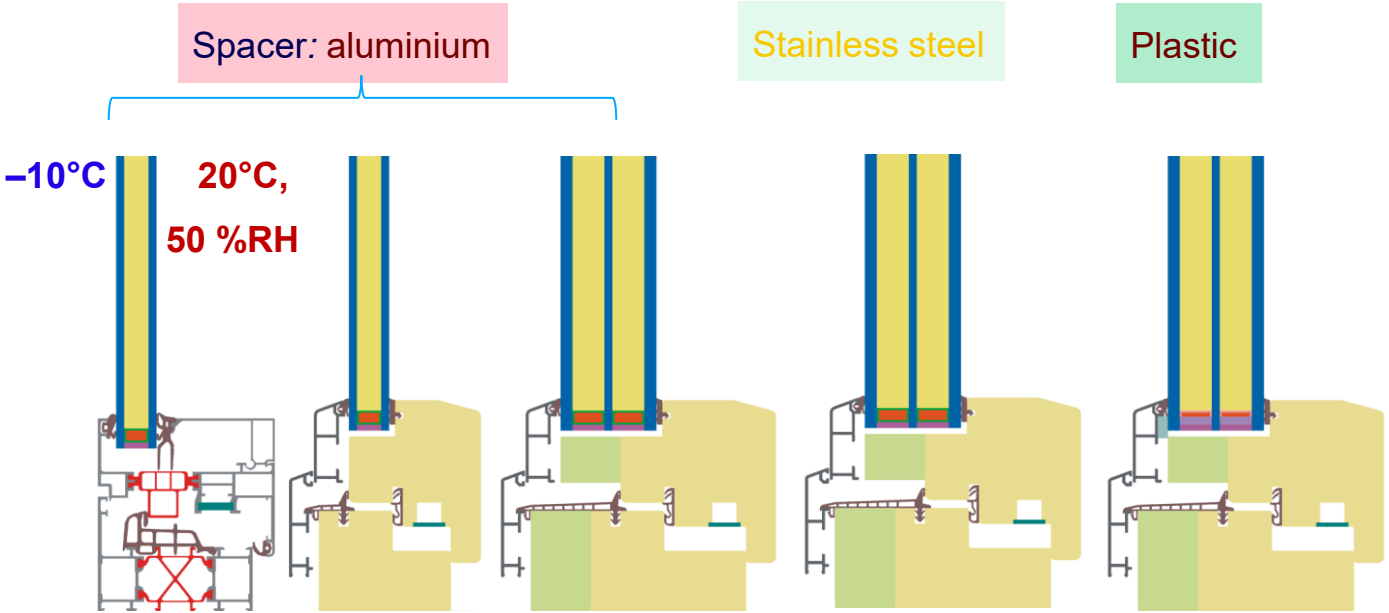


**Increasing performance**

RMIT UNIVERSITY

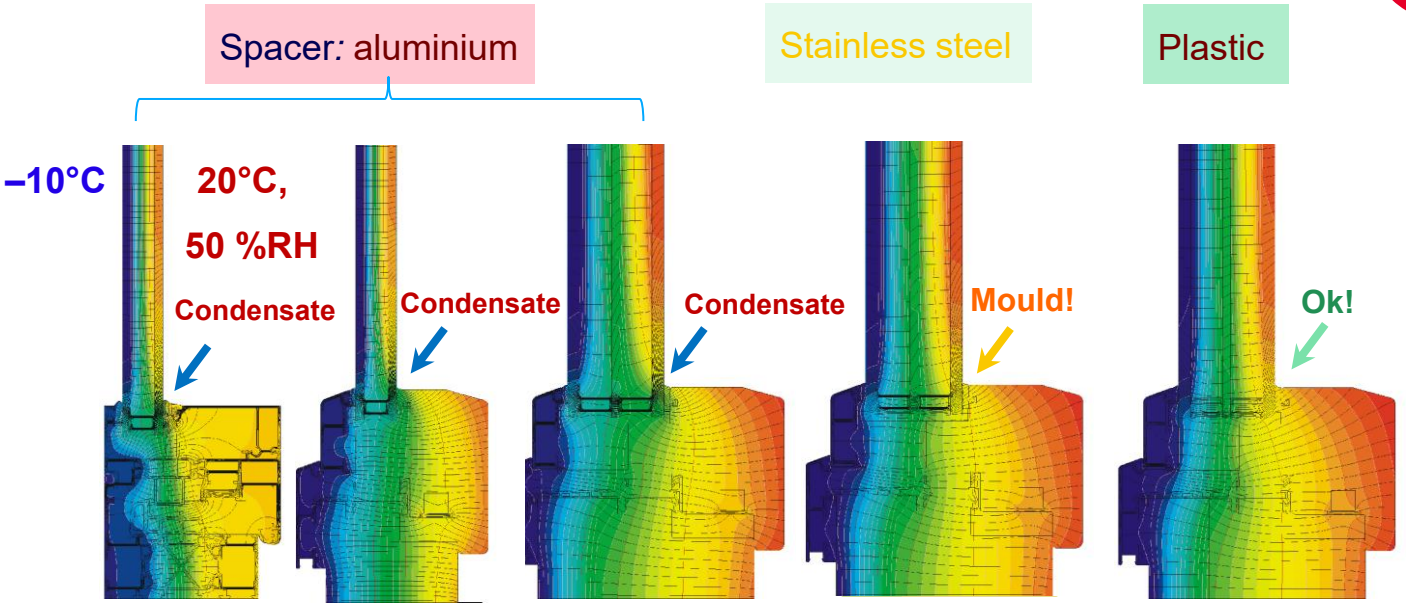


| | | | | | |
|---|---|---|---|---|---|
| **Inside temp [°C]** | 7.73 | 5.84 | 8.53 | 12.00 | **13.61** |
| **$\Psi_g$ [W/(mK)]** | 0.093 | 0.078 | 0.103 | 0.071 | **0.028** |

# The glass edge is thermal weakest point

# Calculating U-values

RMIT UNIVERSITY

# Window Geometric Definitions

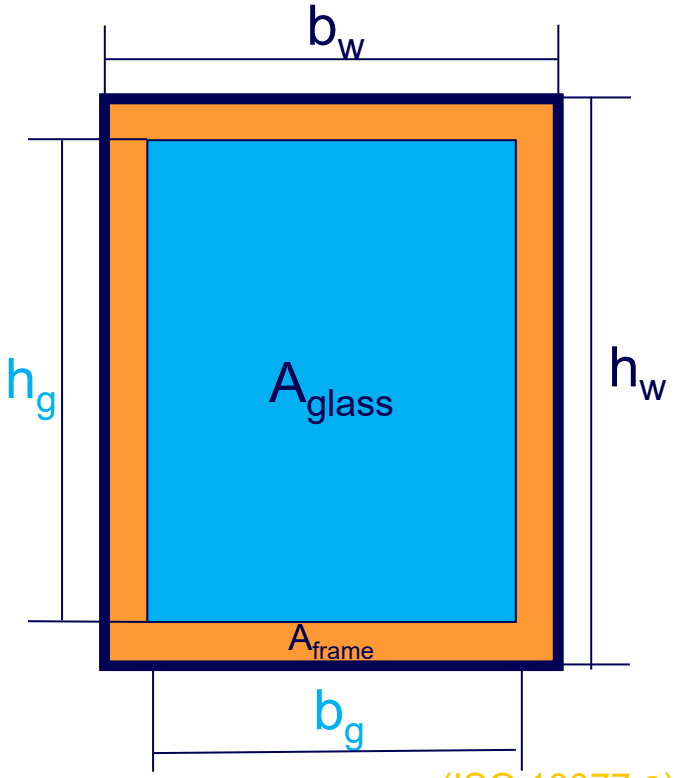


(ISO 10077-2)

$$A_{window} = b_w * h_w$$

$$A_{glass} = b_g * h_g$$

$$A_{frame} = A_{window} - A_{glass}$$

$$L_{glass} = 2\ b_g + 2\ h_g$$

$$L_{installation} = 2\ b_w + 2\ h_w$$

RMIT UNIVERSITY

# Calculating U-values of Windows

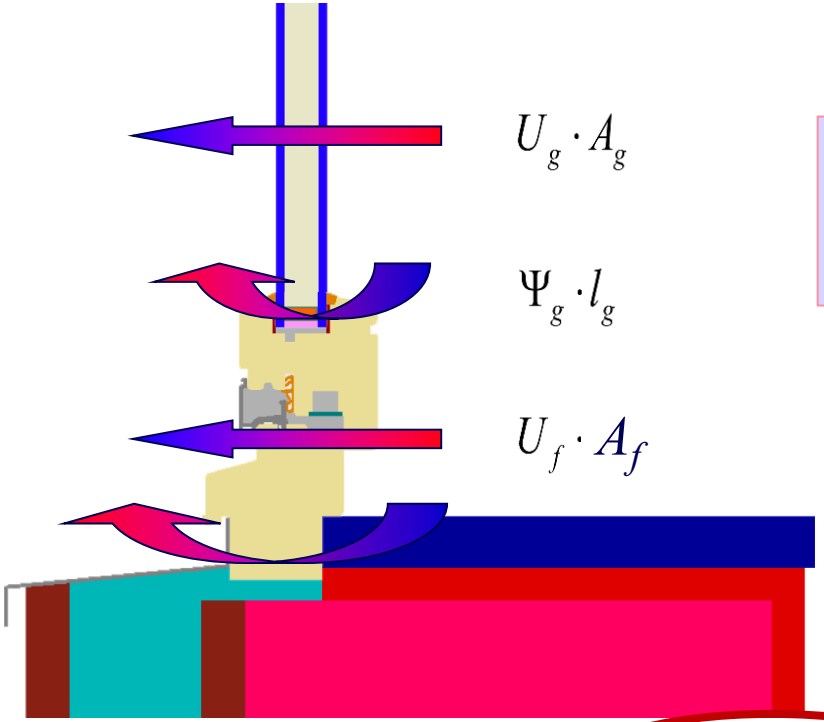


**The U-value of the installed window $U_{w,installed}$**

$$U_{w,installed} = \frac{U_g \cdot A_g + U_f \cdot A_f + \Psi_g \cdot l_g + \Psi_{install} \cdot l_{install}}{A_g + A_f}$$

**Not part of ISO 10077-2**

# Calculating U-values of Windows

$U_g$
U-Value of the Glass

$U_f$
U-Value of the Frame

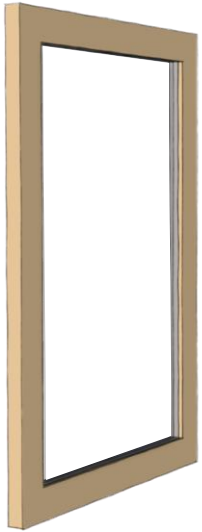

$U_w$
U-Value of the Window

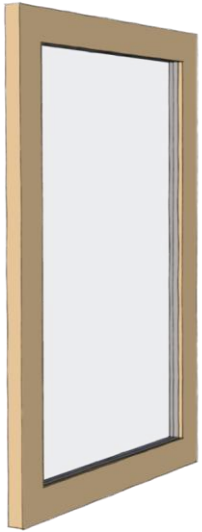

$U_{w\text{-installed}}$
U-Value of the Window in the Wall

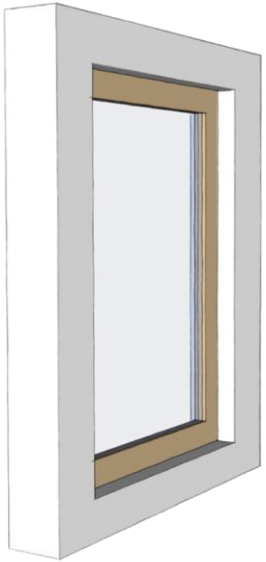

# Calculating G-values

RMIT UNIVERSITY

# Windows: U-Values and G-Values

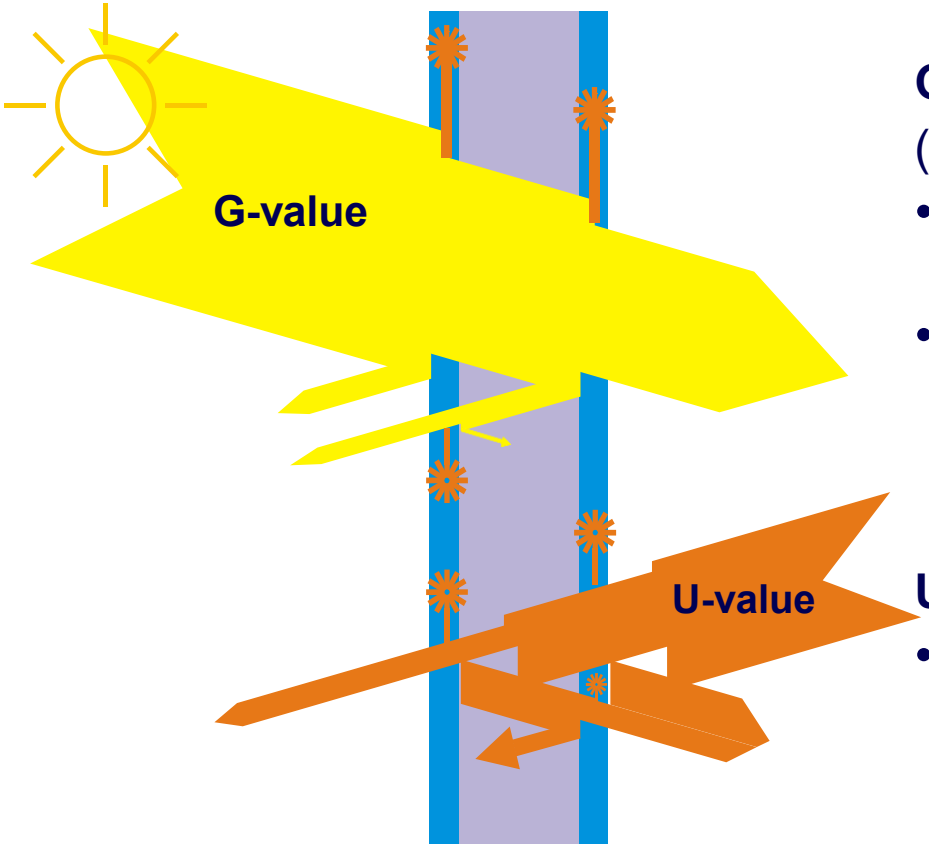


**G-value**

(or Solar Heat Gain Coefficient, **SHGC**)

- The total energy transmission of a window.
- Describes the sum of the energy transmitted from direct solar radiation.

**U-value**

- An indicator of the transmission heat losses of a window.

# Window Glazing: Getting better!

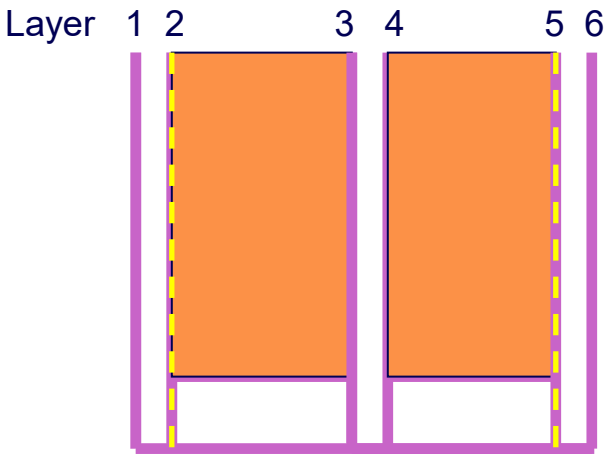


| Glazing | $U_g$ [W/(m²K)] |
|---|---|
| a) Single pane | ≈ 5.5 |
| b) Double pane | 3.0 |
| c) Triple pane | 2.3 |
| d) Double pane (Ar) | 2.2 |
| e) Double pane (Ar) & coating | 0.9...1.3 |
| f) Triple pane (Ar) & coating | 0.5...0.8 |

RMIT UNIVERSITY

# Window Glazing: Gap width maximum?

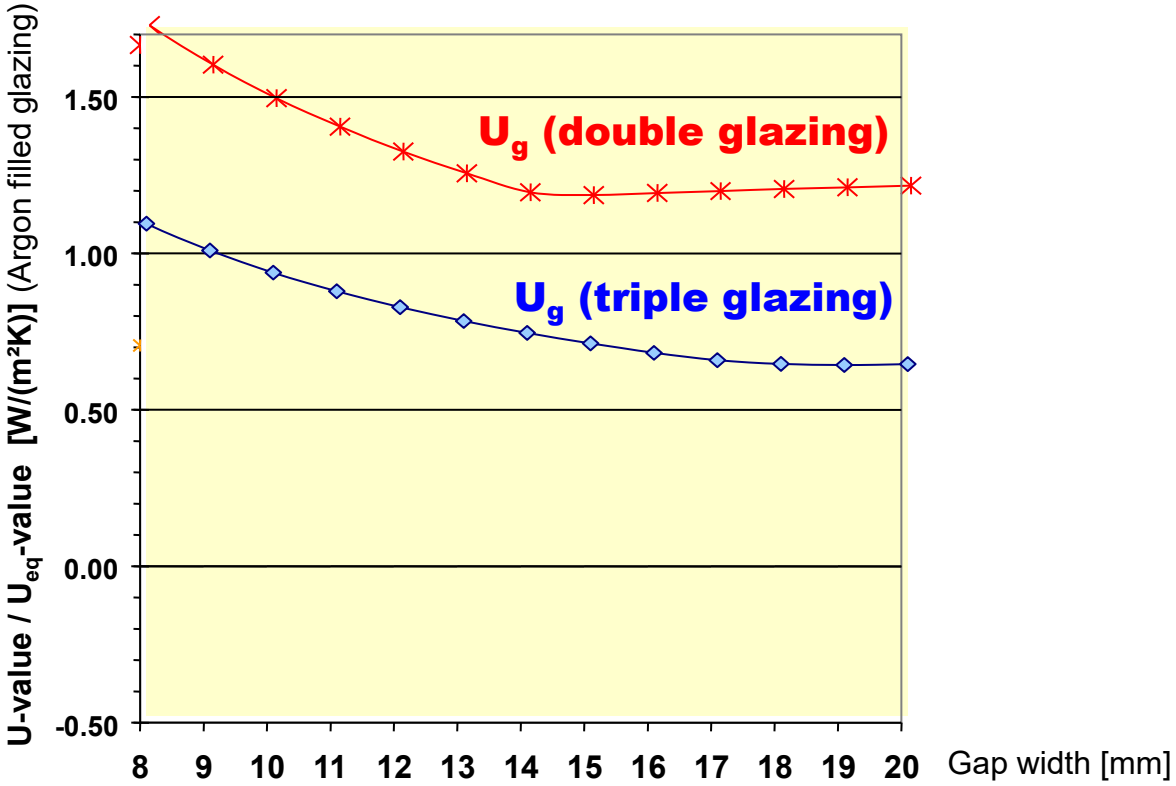


RMIT UNIVERSITY

# Glazing: Hard Coatings?

**2 * 18 mm Argon**

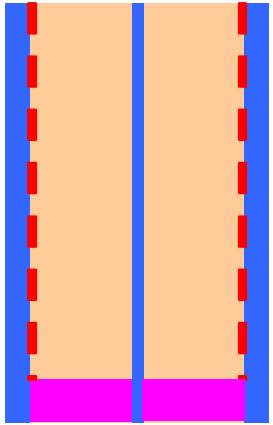

**2 * 18 mm Argon**
**with hard coating**

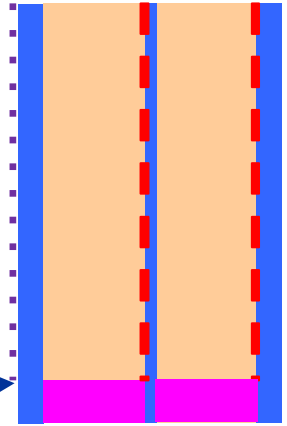

$U_g$ = 0.48 W/(m²K), g = 0.45
$U_g$ = 0.64 W/(m²K), g = 0.66

$U_g$ = 0.45 W/(m²K), g = 0.48
$U_g$ = 0.60 W/(m²K), g = 0.68

Raises the temperature, avoids dew at the outside.

RMIT UNIVERSITY

# Windows: Thin Layer Glazing?

| | | | |
|---|---|---|---|
| Glass configuration: | 4/18/4/18/4 (mm)<br>(glass/gap/glass/gap/glass) | Glass configuration: | 2/10/2/10/2 (mm)<br>(glass/gap/glass/gap/glass) |
| Thickness: | 48 mm | Thickness: | 26 mm |
| Gas: | Argon | Gas: | Krypton |
| $U_g$: | 0.53 W/(m²K) | $U_g$: | 0.56 W/(m²K) |
| Weight: | 30 kg/m² | Weight: | 15 kg/m² |

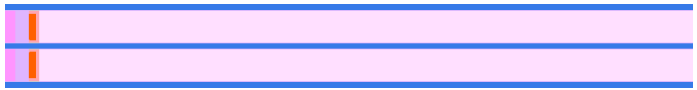

RMIT UNIVERSITY

# Window frame ratio’s

RMIT UNIVERSITY

# Window Frames: Area

**Beware of very huge panes:**

- Hard to carry
- Thicker panes needed (lower g-value)
- Much more expensive.

**Reasonable size:**
**1.4 m * 2.5 m**

**15% frame fraction**

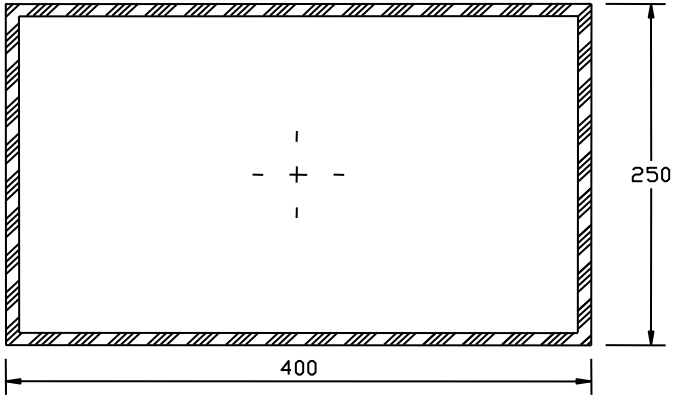


**40% frame fraction**

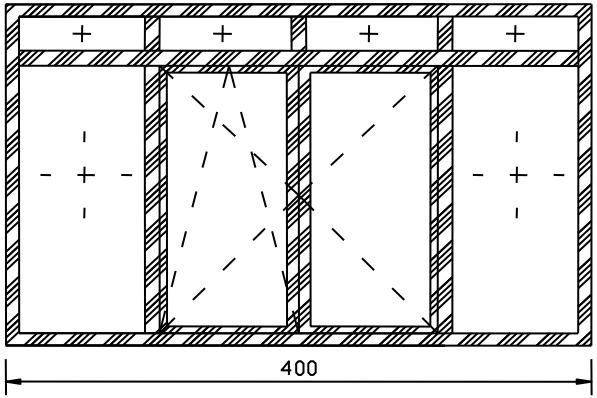


RMIT UNIVERSITY

# Window Size & Unit U-Value

**'Frame Ratio'** Frame Area: Total Window Area

**'Glazing Fraction'** %Glazing Area to Total Window Area

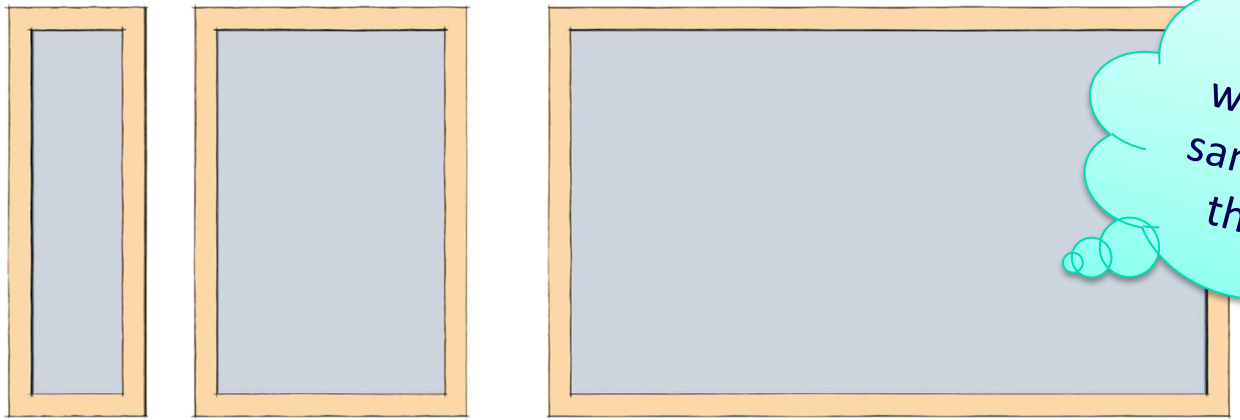

0.6 x 1.8 m 1.2 x 1.8 m 3.0 x 1.8 m

If all of these windows have the same U-values, are they the same?

Calculate the $U_w$ of each of these windows?

$U_f$: 0.80 W/(m²·K)

$U_g$: 0.55 W/(m²·K)

# Window Frames: Design Principles

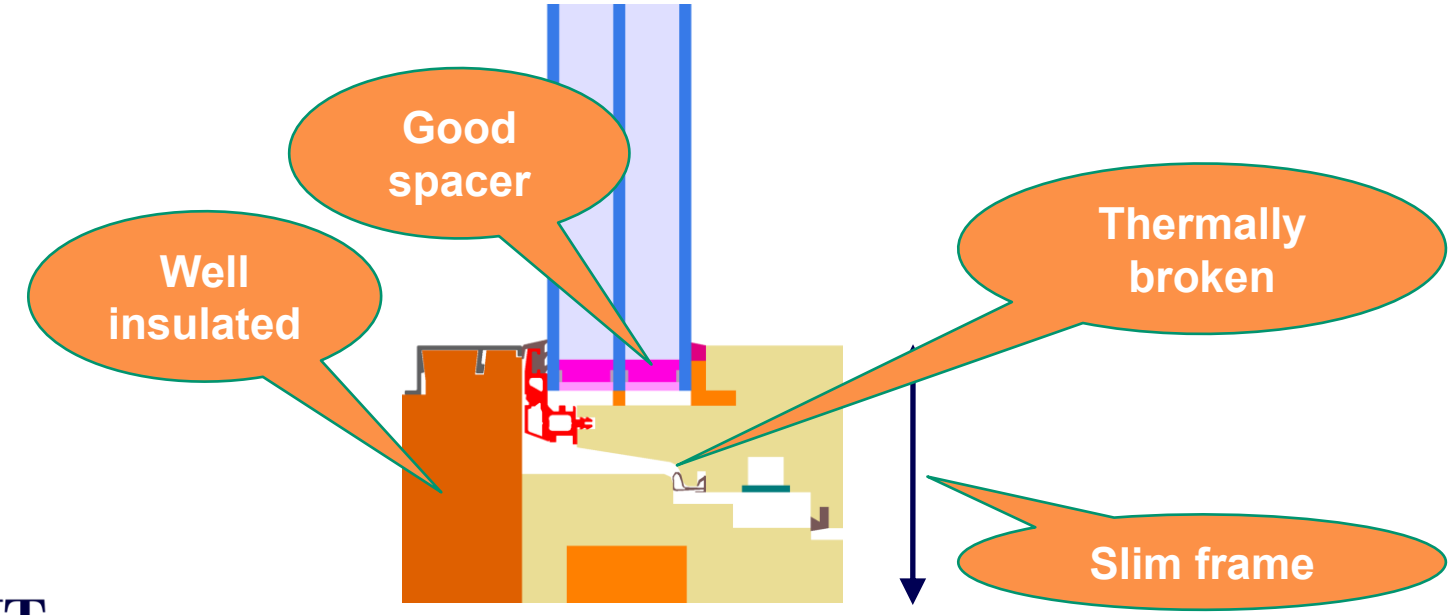


RMIT UNIVERSITY

# Frames for Various Climates

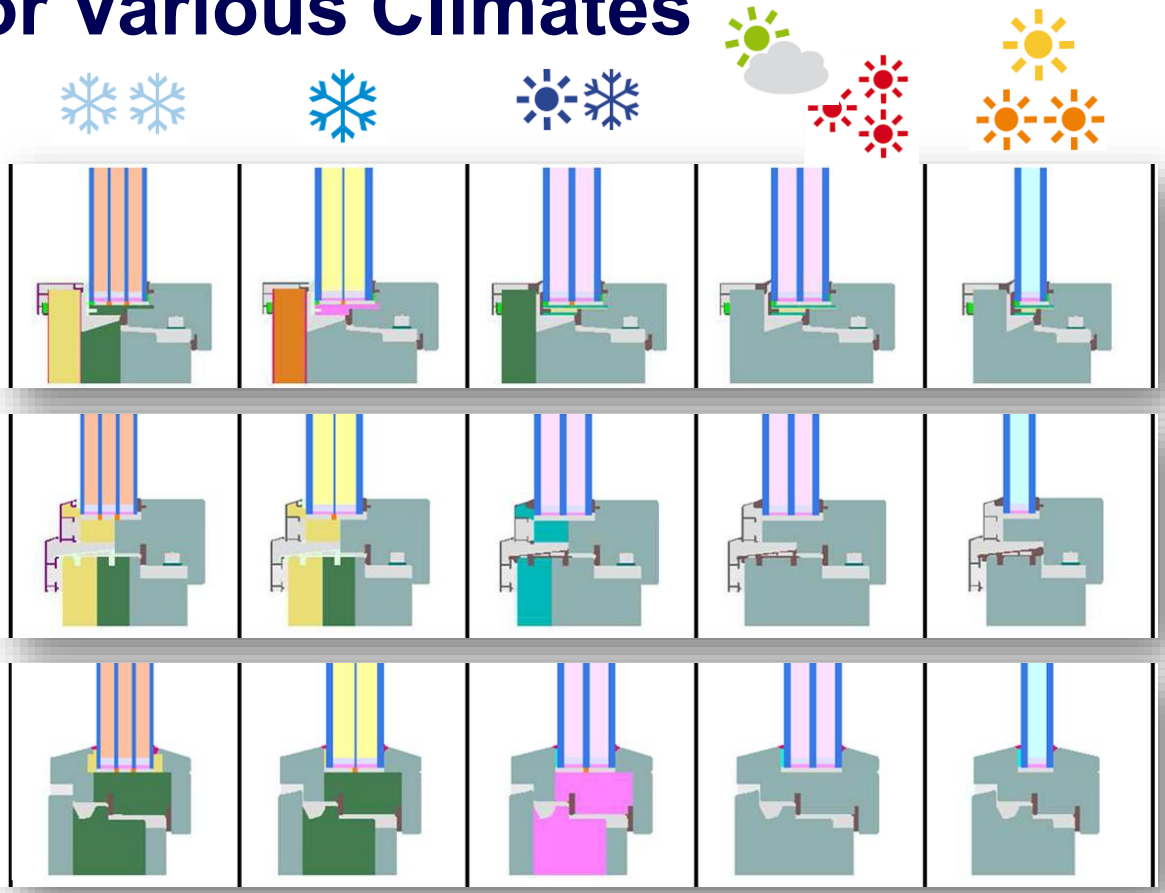

RMIT UNIVERSITY

# Inclined Components

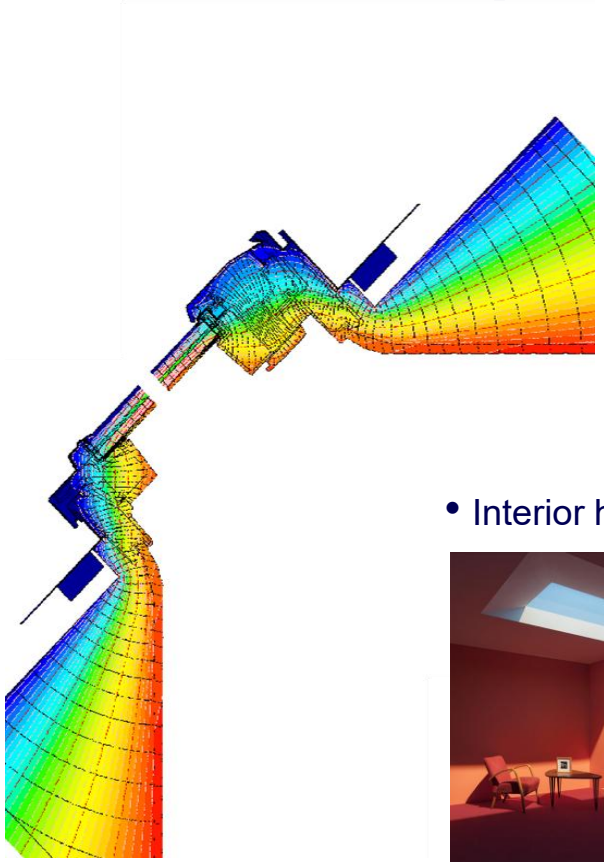

| Glazing build-up | $U_{g,vertical}$ [W/(m²K)] | $U_{g,45°}$ [W/(m²K)] |
|---|---|---|
| 4/8Ar/4/8Ar/4 | 1.00 | 1.00 |
| 4/12Ar/4/12Ar/4 | 0.74 | 0.76 |
| 4/16Ar/4/16Ar/4 | 0.60 | 0.74 |
| 4/18Ar/4/18Ar/4 | 0.55 | 0.74 |
| 4/8Kr/4/8Kr/4 | 0.68 | 0.69 |
| 4/12Kr/12/8Kr/4 | 0.51 | 0.67 |
| 4/16Kr/4/16Kr/4 | 0.50 | 0.66 |
| Double vacuum | 0.50 | 0.50 |

- Interior heat transfer resistance changes: lower requirements for $U_g$ (cool, temperate):

$U_{W,45°,installed,max}$ = 1.02 W/(m²K)

$U_{W,horizontal,installed,max}$ = 1.11 W/(m²K)

# Window shading principles

RMIT UNIVERSITY

# Window shading – Principles

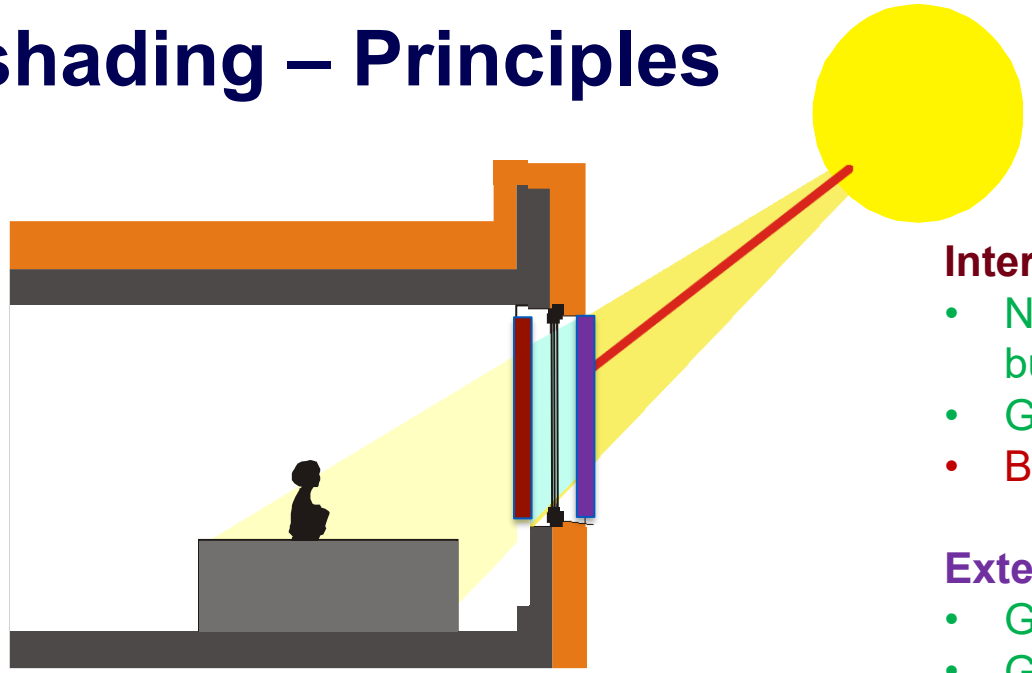

**Internal blinds**

- No impact on historic buildings
- Glare protection
- Bad sun blocking

**External blinds**

- Good sun blocking
- Glare protection
- Does not usually fit look of historic buildings

Solar gains are welcome at winter times.

At summer times, they need to be avoided.

RMIT UNIVERSITY

# Interior vs Exterior Blinds

Exterior blinds are an essential component on projects with a substantial amount of East and West glazing!

| Type of Shading Device | Exterior Position | Interior Position |
|---|---|---|
| Blinds, vertical lamellas | 6% | 70% |
| Roller blinds/marquees, white | 24% | 60% |
| Roller blinds/marquees, grey | 12% | 80% |

# Shading – Principles

The nearer the shading to the outside, the more effective

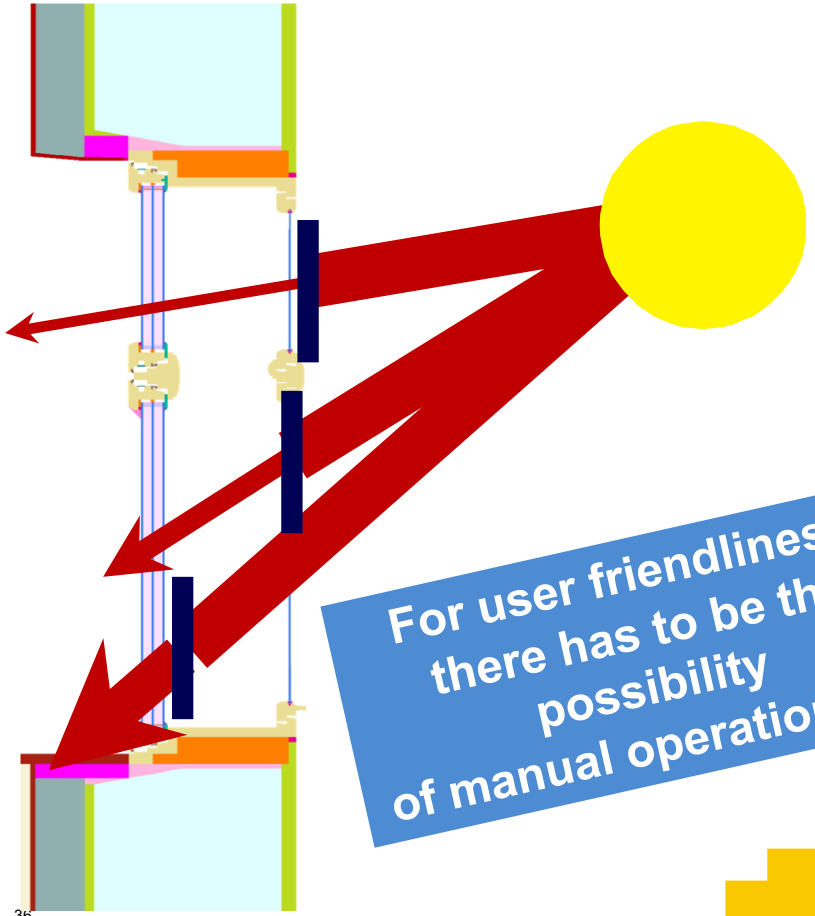

For user friendliness, there has to be the possibility of manual operation, too

RMIT UNIVERSITY

# Shading – Options

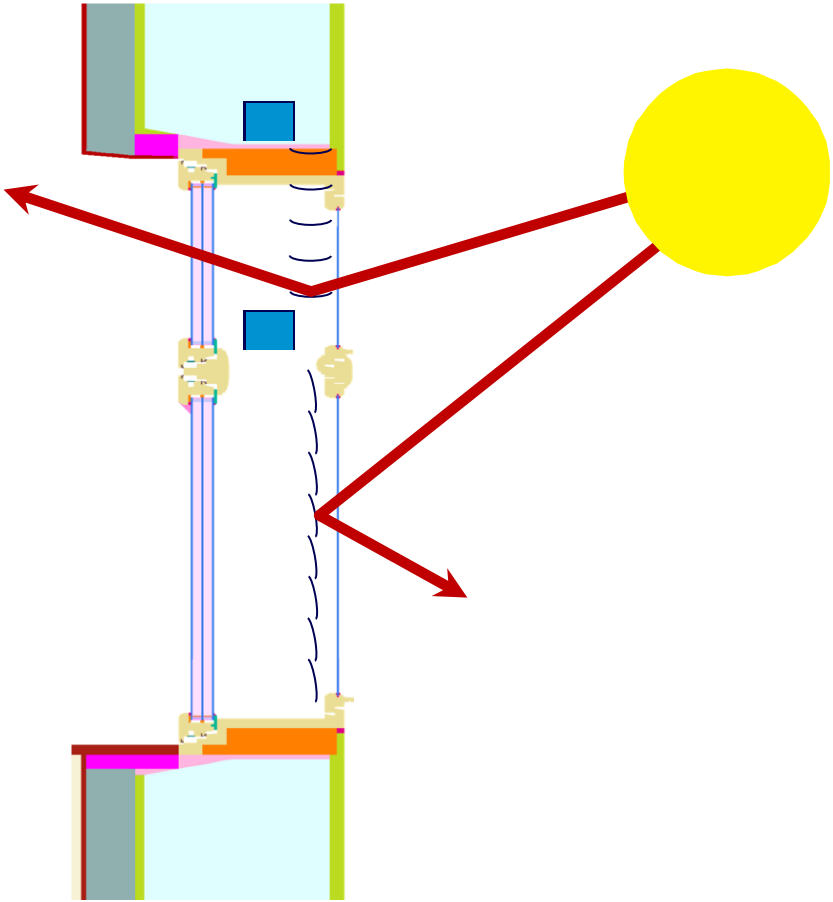

## Integrated shading by lamella

(in an unsealed air gap between two glazing units)

- Hide lamella package in the frame
- If not enough space, put second package behind the transom.
- Use upper part for redirecting daylight
- Use the lower part of the shading for sun blocking
- Easy to repair

# Shading – Options

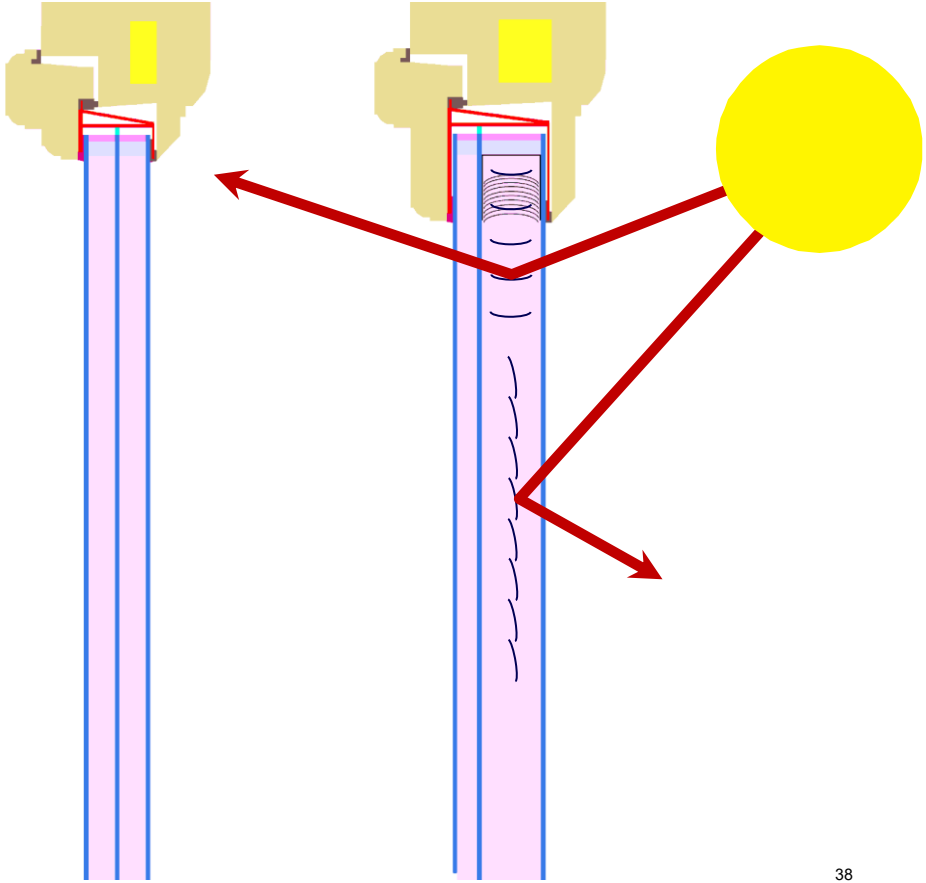

**Glass-integrated lamella**
(integration in sealed gap)

- Wide gas gap needed
- Wider frames needed
- In triple glazing, use the outer gas gap for the lamella
- Daylight redirection possible
- In case of damages, the complete glass package must be replaced.

# Thank you

RMIT UNIVERSITY